Mis C 3W switch

outdoor lighting

5023 / 5024 / 5025

BENEITO FAURE®
passion for led light

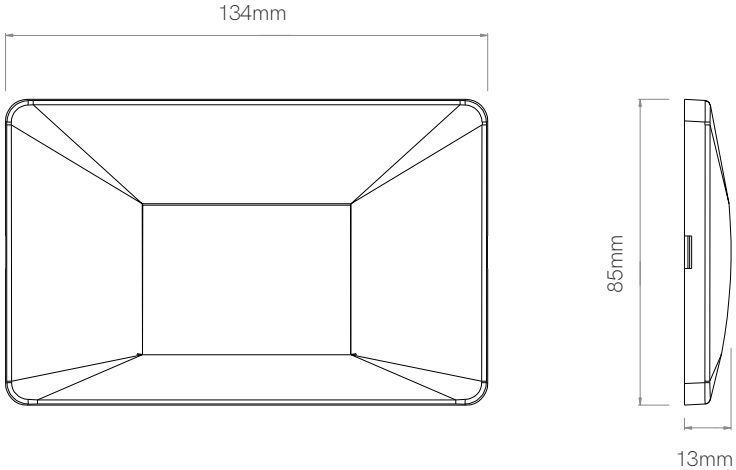

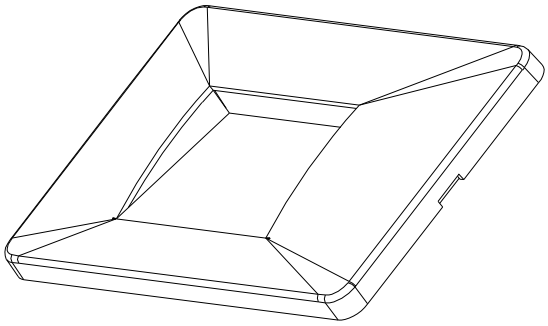

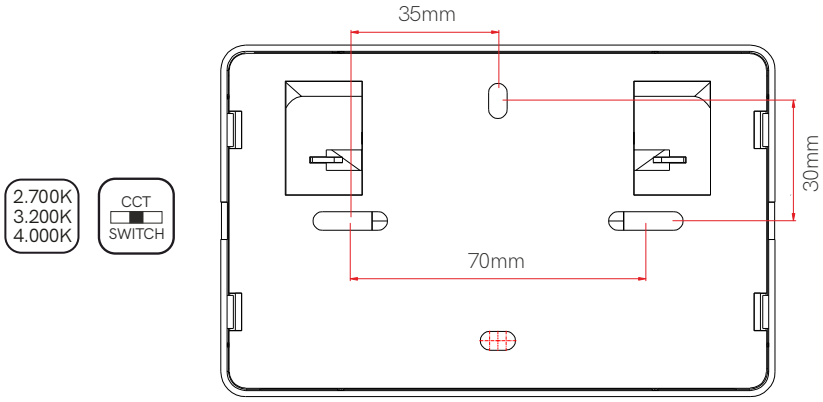

2.700K 3.200K 4.000K | CCT SWITCH | 65 IP | 220/240 VAC | ≥80 CRI | 50/60 Hz

IK06 | 25.000 HOURS | >0,5 PF | +40°C -20°C | 3 YEARS WARRANTY | 140 Lm

Políg. Valldoriolf C/Thomas Edison 4-6
08430 La Roca del Vallés (Barcelona) Spain
Tel.: 00 34 93.568.40.45 www.beneito-faure.com
B-63378673 Made in P.R.C. WEEE DE98004440

CE RoHS EMC

Energy efficiency class for light source is Class G.