Ark recessed 6W

decorative lighting

BENEITO FAURE®
passion for led light

4808 / 4809 / 4810 / 4811 / 4812 / 4813

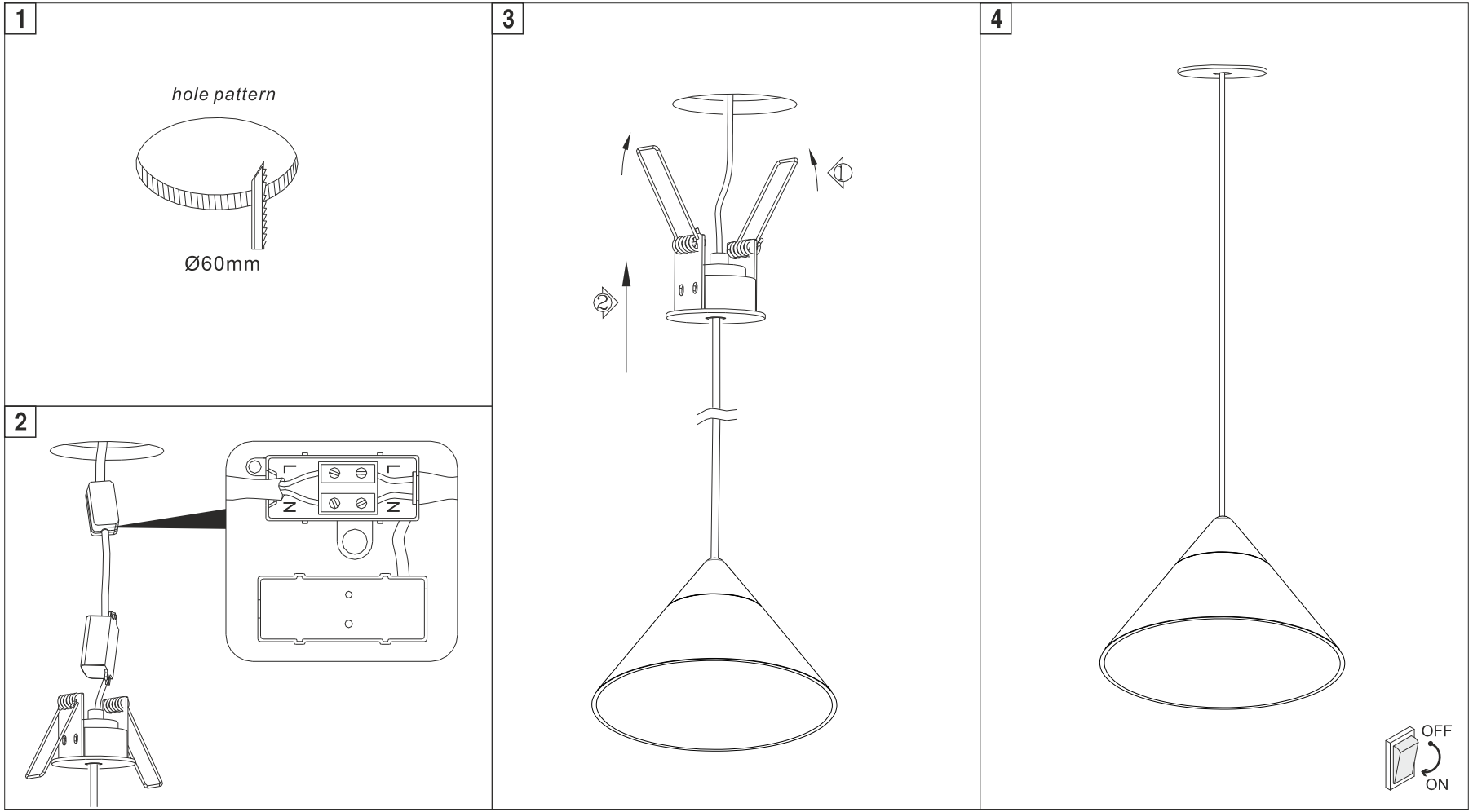

3 YEARS WARRANTY | 26.000 HOURS | 90° | >0,5 PF | 220/240 VAC | 20 IP | UGR <19 | ≥90 CRI | 50/60 Hz | +40°C -20°C | 2.700K 350 Lm | 3.000K 360 Lm

Políg. Valldoriolf C/Thomas Edison 4-6
08430 La Roca del Vallés (Barcelona) Spain
Tel.: 00 34 93.568.40.45 www.beneito-faure.com
B-63378673 Made in P.R.C. WEEE DE98004440

CE RoHS EMC

Energy efficiency class for light source is Class G.