BENEITO FAURE®
passion for led light

Pulsar 3,5W

CODE 4297, 4298, 4299, 4300, 4301, 4302, 4451, 4452, 4453, 4454, 4455, 4456

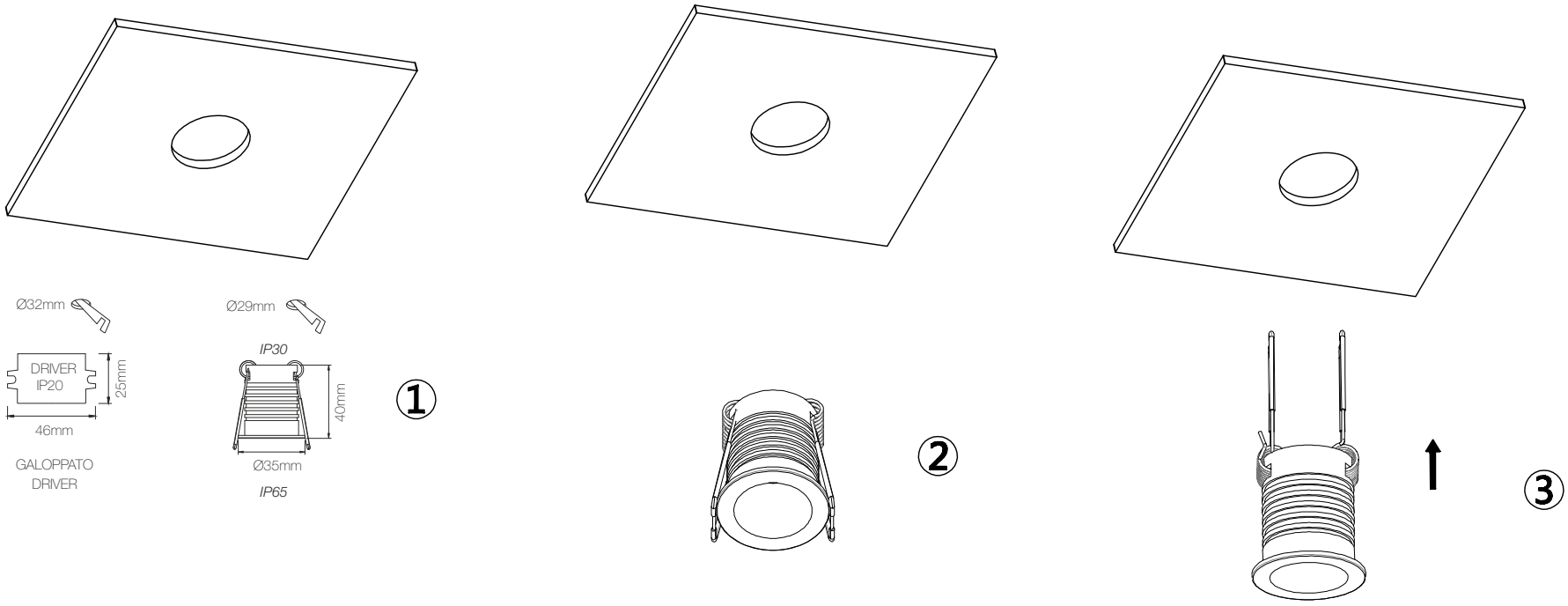

ALUMINIUM | IP65 | TÜV | 10.000 on off LED | NOT DIMMABLE | +40°C -20°C | RoHS Compliant | 220-240v | 30.000h | >80 CRI | 50

Políg. Valldoriolf C/Thomas Edison 4-6
08430 La Roca del Vallés (Barcelona) Spain
Tel.: 00 34 93.568.40.45 www.beneito-faure.com
B-63378673 Made in P.R.C. WEEE DE98004440