INSTRUCTION **MANUAL A**

KUB

90717, 90718
SMD LED, 18W
90719, 90720
SMD LED, 24W

Redo GROUP

www.redogroup.com

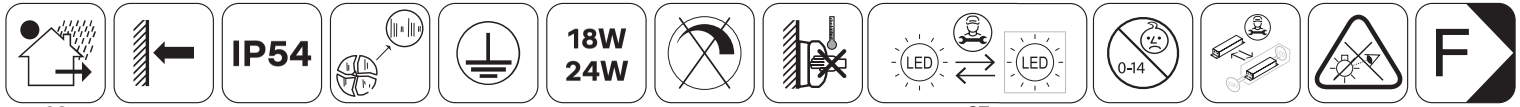
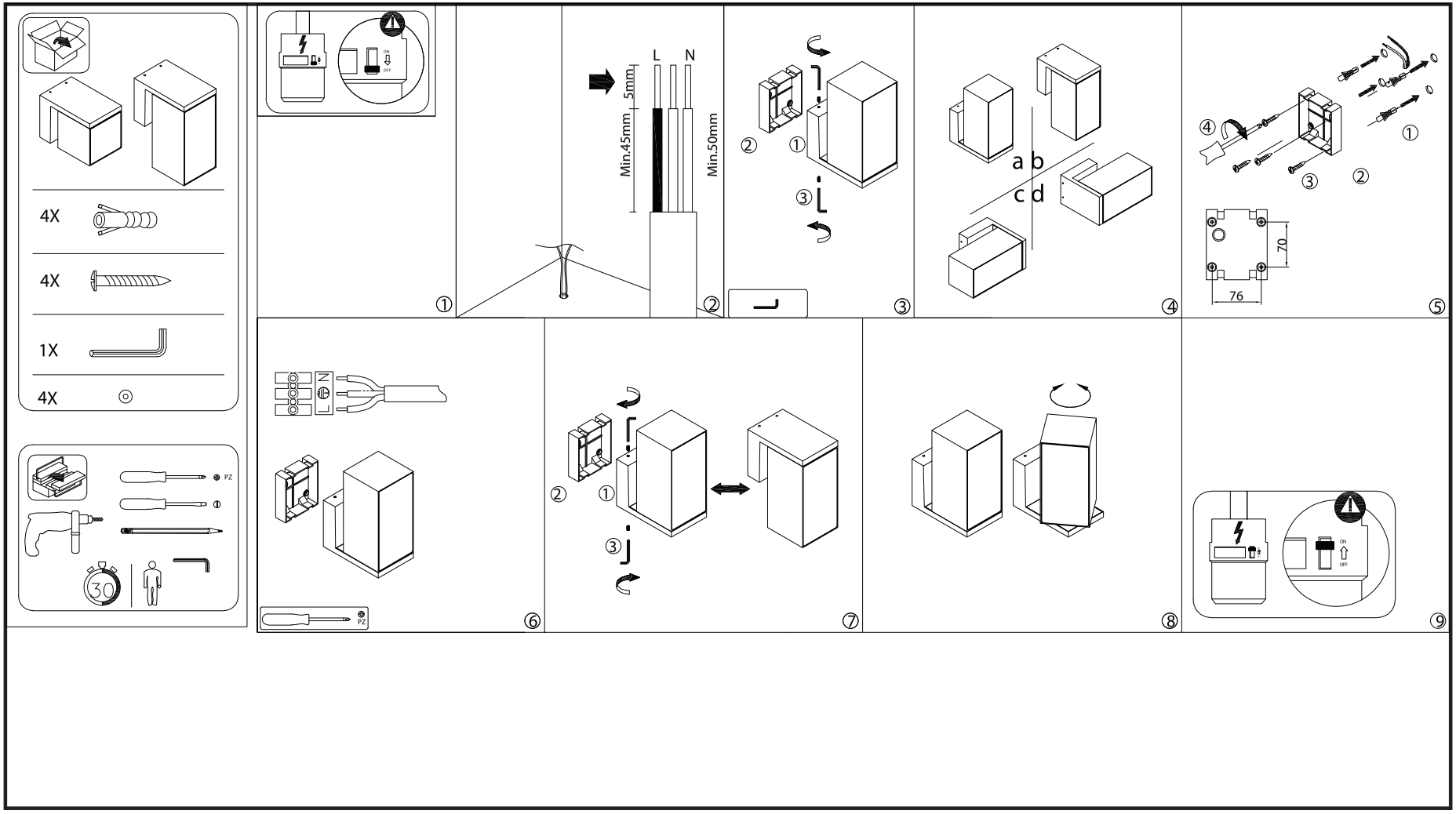
02 06 10 11 12 16 18 23 27 24 31 34 40